Universal Tool

Operator Instructions

Includes - Foreseen Use, Work Stations, Putting Into Service, Operating, Dismantling, Assembly and Safety Rules

Important

Read these instructions carefully before installing, operating, servicing or repairing this tool. Keep these instructions in a safe accessible place.

Manufacturer/Supplier

Universal Air Tool Company Limited
Unit 8
Lane End Industrial Park
High Wycombe
Bucks
HP14 3BY

Tel No **(01494) 883300** Fax No **(01494) 883237**

Product Type	RPM
Right Angle Drill	**1,800** Cycles Per Min

Model No/Nos	Serial No
UT5807 3/8" Capacity	

Product Nett Weight		Recommended Use Of Balancer Or Support	Recommended Hose Bore Size - Minimum				Recommended Max Hose Length			
2.42	lbs	**No**	**3/8**	Ins	**10**	M/M	**30**	Ft	**10**	M
1.10	Kg									

Air Pressure

Recommended	Working	**6.3**	bar	**90**	PSI
Recommended	Minimum	**n/a**	bar	**n/a**	PSI
Maximum		**7.0**	bar	**100**	PSI

Noise Level **Sound Pressure Level 86.1 dB(A)**
Sound Power Level 97.9 dB(A)

Test Method **Tested in accordance with Pneurop test code PN8NTC1 and ISO Standard 3744**

Personal Safety Equipment

Use - Safety Glasses **Yes**
Use - Safety Gloves
Use - Safety Boots
Use - Breathing Masks
Use - Ear Protectors

Vibration Level **Less than 2.5** Metres / Sec^2

Test Method **Tested in accordance with ISO standard 8662/1**

Foreseen Use Of Tool

This drill is designed for the purpose of drilling holes in all types of materials, i.e. metals, wood, stone, plastics etc. using drilling bits designed for this purpose. It may be used with other forms of cutting tools, polishing devices or for sanding using coated abrasive products. Before using any such products first check with the manufacturer their suitability for use with this type of drill. Do not use bonded abrasive products (i.e. grinding wheels) or saw blades or any device which has a permitted safe working speed less than the free speed of the drill.
Do not use this drill for any other purpose than that specified without consulting the manufacturer or the manufacturer's authorised supplier.

Work Stations

The tool should only be used as a handheld hand operated tool. It is always recommended that the tool is used when standing on the solid floor. It can be used in other positions but before any such use, the operator must be in a secure position having a firm grip and footing and be aware that the drill can develop a torque reaction see section "Operating".

Putting Into Service

Air Supply

Use a clean lubricated air supply that will give a measured air pressure at the tool of 90 p.s.i./6.3 bar when the tool is running with the trigger fully depressed. Use recommended hose size and length. It is recommended that the tool is connected to the air supply as shown in figure 1. Do not connect the tool to the air line system without incorporating an easy to reach and operate air shut off valve. The air supply should be lubricated. It is strongly recommended that an air filter, regulator, lubricator (FRL) is used as shown in Figure 1 as this will supply clean, lubricated air at the correct pressure to the tool. Details of such equipment can be obtained from your supplier. If such equipment is not used then the tool should be lubricated by shutting off the air supply to the tool, depressurising the line by

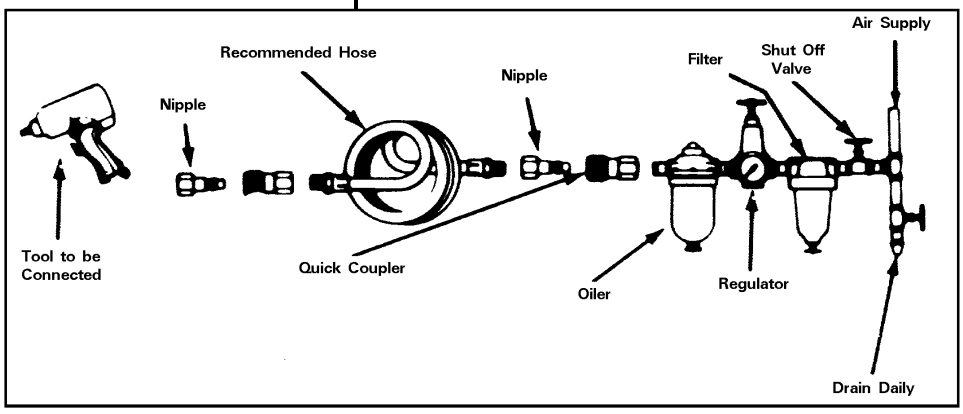

pressing the trigger on the tool. Disconnect the air line and pour into the intake bushing a teaspoonful (5ml) of a suitable pneumatic motor lubricating oil preferably incorporating a rust inhibitor. Reconnect tool to air supply and run tool slowly for a few seconds to allow air to circulate the oil. If tool is used frequently lubricate on daily basis and if tool starts to slow or lose power.
It is recommended that the air pressure at the tool whilst the tool is running is 90 p.s.i./6.3 bar. The tool can run at lower and higher pressures with the maximum permitted working air pressure of 100 p.s.i./7.0 bar.

Operating

Select suitable drill bit, insert the shank into the drill chuck as far as possible and tighten chuck with key supplied making sure that the shank of the device is securely clamped centrally between the three chuck jaws. Remove chuck key.
When drilling holes of all sizes it is advised to use a pointed punch to mark the centre at which the hole is to be drilled as this will provide a starting point for the drill tip. This procedure will prevent the drill bit from skidding, ensure that the hole is drilled where intended and help to prevent drill breakage when using small drills. When drilling, particularly with small diameter drills, always try to ensure that load applied to the drill is such that the drill bit is always at right angles to the hole being drilled. Do not force the drill but allow it to cut.
When drilling always adopt a firm posture to be able to counteract any sudden movement of the drill due to torque reaction. Such torque reaction can occur when the drill stalls due to a too heavy load being applied or the material being too hard or tough. The torque reaction can occur when the drill breaks through the material being drilled, particularly on sheet metal. Always use eye protection and hand protection is advised, particularly when drilling holes in metals where the material being removed from the hole is in the form of long sharp strips. Do not tie the drill chuck key to the drill as the attaching device i.e. string or chain could become entangled with the rotating chuck and bit etc.
If using an abrasive device, drilling stone or performing any operation where dust is created, it is recommended to use a breathing mask.
Always ensure that the material to be drilled is firmly fixed to prevent its movement.
It is also recommended that when drilling holes of large diameter to first pre drill a hole of smaller diameter as this will reduce effort required to drill the hole and minimise torque reaction.

Dismantling & Assembly Instructions

Disconnect from air supply
To remove the chuck (59) first open the chuck jaws with the key provided and remove chuck screw (55) left hand thread. Place chuck key securely into chuck and give the key a sharp tap so as to unscrew a right hand thread. Grip motor housing (1) in a vice with soft jaws on the flats at the rear end. Drive out pin (10) and take off the throttle lever (9) Unscrew inlet bushing (3) With a needle pointed tool, prise out deflector retainer (6) pull out deflector (4) Unscrew 2 off screws (8) and take off body cap (7) and gasket (11) Unscrew valve together with o-ring (13) and reverse retainer (20) and take out spring (14) and pull out valve pin (15) and o-ring (16)
Pull out reverse valve (23) Do not remove either of the brass bushes in the motor housing (1) unless replacements are required. If necessary reverse bush (18) can be taken out of the motor housing (1) by first removing pin (22) With circlip pliers remove retainer ring (52) and pull out spindle assembly. Remove bevel gear (44) and key (49) Drive spindle (48) through bearing (50) but do not remove grease plug (54) unless a replacement is required.
Slacken lock ring (35) and then unscrew angle head (45) [left hand thread] from main assembly. Take out gear drive assembly and dismantle by pressing pinion gear (43) off bearing (42). Take out planet gear with pins assembly (39) 3 off idler gears (37) and internal gear (36) Pull out the motor assembly complete with cylinder pin (32) from motor housing.
Grip the front end plate (33) by head and with a non metallic or soft metal [lead or aluminium] hammer tap the splined end of the rotor (30) to drive it through the front end plate (33) and bearing (34) assembly. Tap out bearing (34) front end plate (33).
Remove cylinder (29) and take out five rotor blades (31) from rotor (30) support rear end plate (28) in a piece of tube with a diameter as close as possible to the maximum diameter of the rotor and tap the non splined end of the rotor to drive it through the rear end plate (28) and bearing (25)
Take out motor gasket (27) from motor housing (1)

Reassembly

Clean all component parts and examine for wear before reassembling. Use only manufacturer or distributor supplied parts.
Check in particular for wear on bevel gears, o-rings and rotor blades.
Lightly coat all parts with a suitable pneumatic tool lubricating oil, preferably one incorporating a rust inhibitor. Pack bearings and grease gears and bevel gears with a lithium or molybdenum based general purpose grease. Reassemble in the reverse order taking note of the following:

1) When fitting gasket (27) make sure that it does not cover the ports and is positioned correctly.
2) Make sure that the motor locating pin locates correctly in the holes in the motor end plates and in the small hole between the two ports at the bottom of the bore of the motor housing
3) For the motor assembly, ensure that the motor end plates that abut the cylinder are flat and are free from burrs and sharp edges. If necessary lap the faces on a fine grade of abrasive paper laid on a flat surface.

Safety Rules When Using A Drill

1) Read all the instructions before using this tool. All operators must be fully trained in its use and aware of these safety rules. All service and repair must be carried out by trained personnel.
2) Always select a suitable cutting, abrasive device suitable for use with this drill.
3) Always shut off the air supply to the drill and depress the trigger to exhaust air from the feed hose before fitting, adjusting or removing the device. Remove drill chuck.
4) Always adopt a firm footing and/or position and be aware of torque reaction developed by the drill.
5) Use only correct spare parts.
6) Check hose and fittings regularly for wear. Do not carry the tool by its hose and ensure that the hand is remote from the on/off valve (trigger) when carrying the tool with air supply connected.
7) Do not exceed maximum recommended air pressure. Avoid low air pressures as this will allow the drill to stall more easily and develop torque reaction.
8) Use safety equipment as recommended.
9) The tool is not electrically insulated. Do not use where there is a possibility of coming into contact with live electricity, gas pipes, water pipes, etc. Check the area of operation before performing the operation.
10) Take care against entanglement of moving parts of the tool with clothing, ties, hair, cleaning rags, etc. This will cause the body to be moved towards the work process and can be very dangerous.
11) Do not attempt to hold or guide the drill chuck when the tool is running. Keep hands clear of the drilling process.

Universal Tool

UT5807 3/8" Capacity Angle Drill

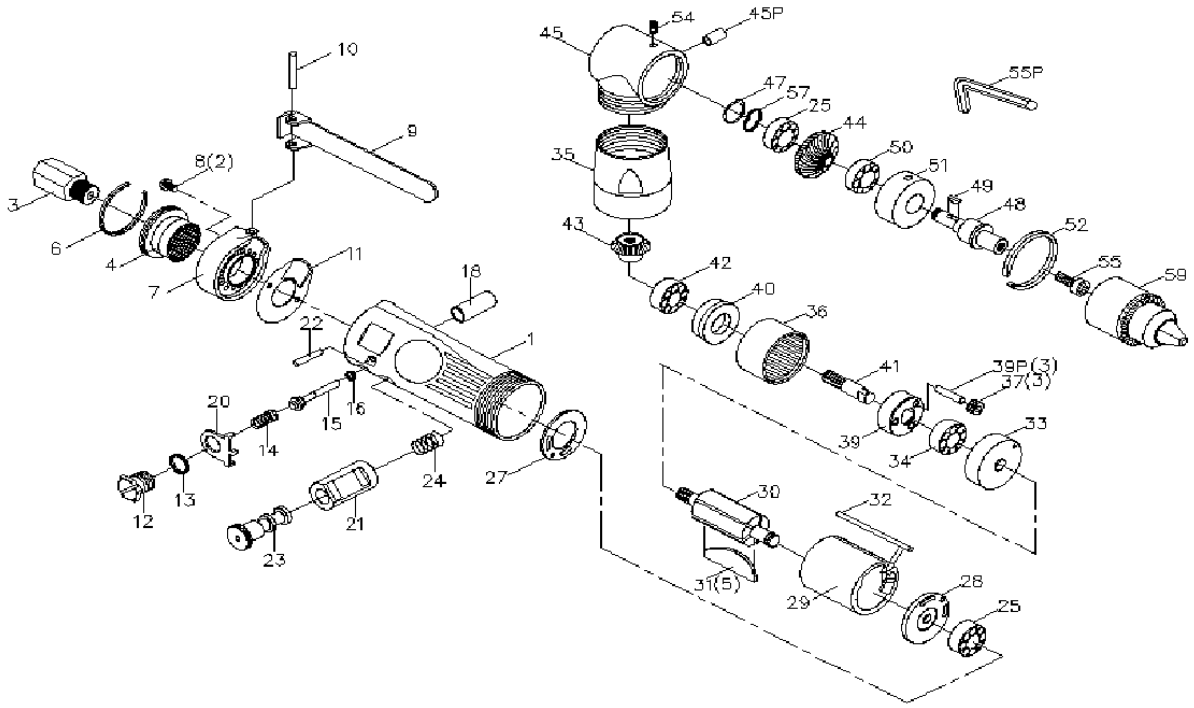

Ref No	Part No	Description
1	126301	Motor Housing
3	126303	Inlet Bushing
4	126304-1AA0	Deflector
6	126306-1JBO	Stop Ring
7	126307	Housing Cap
8	126308-IJBO	Screw (2)
9	126309	Throttle Lever/ Safety Lever
10	P-0030-240	Pin
11	126311-1SPO	Housing Gasket
12	126312-1AAO	Valve Screw
13	O-0700-200	O-Ring
14	126314-1AAO	Valve Spring
15	126315-1GRO	Throttle Valve
16	O-0400-200	O-Ring
18	126318-1AAO	Valve Bushing
20	126320-1JBO	Retainer
21	126321-1GRO	Bushing
23	126323-1GRO	Reverse Valve
24	126324-1AAO	Reverse Spring
25	729705	Ball Bearing (2)
27	126327-1SPO	Motor Gasket
28	126328-1GVO	Rear End Plate
29	126329	Cylinder (P.M) / (Steel)
30	126330-1GVO	Rotor
31	106316-1GRO	Rotor Blade (5)
32	126332-1AA0	Motor Pin

Ref No	Part No	Description
33	126333-1JBO	Front End Plate
34	729188	Ball Bearing
35	126335	Lock Ring
36	126336-1GRO	Internal Gear
37	106322-1TTO	Planet Gear (3)
39	126339-1AAO	Cage
39P	103324-AAAO	Pin (3)
40	126340-1JBO	Spacer
41	126341-1GVO	Gear Spindle
42	732229	Ball Bearing
43	126343-1AAO	Pinion
44	126344-1AAO	Gear
45	126345	Angle Housing
45P	103633-BSPO	Ball Cap
47	R-S056	Retainer Ring
48	126348-1JBO	Spindle
49	126349-1AAO	Key
50	750841	Ball Bearing
51	126351-1LLO	Bearing Case
52	R-R344	Retainer Ring
54	127810-AJBO	Set Screw
55	137701-1AAO	Screw (2)
57	126357-1AAO	Wave Washer
59	H0019K	3/8" Keyless Chuck

Declaration of Conformity

Universal Air Tool Company Limited

Unit 8, Lane End Industrial Park, High Wycombe, Bucks, HP14 3BY, England

declare under our sole responsibility that the product

Model UT5807 Right Angle Drill, Serial Number

to which this declaration relates is in conformity with the following standard(s) or other normative document(s)

EN792 (Draft), EN292 Parts 1 & 2, ISO 8662 Part 1, Pneurop PN8NTC1

following the provisions of **89/392/EEC as amended by 91/368/EEC & 93/44/EEC Directives**

Lane End — Place and date of issue

D.H.Moppett (Man Director) — Name and signature or equivalent marking of authorised person

12) Use only compressed air at recommended conditions.
13) Do not attempt to fit attachments, i.e. for sawing, hedge cutting, grinding, chain sawing, etc.
14) If the tool appears to malfunction remove from use immediately and arrange for service and repair.
15) If an additional side handle is fitted to the tool ensure that it is correctly positioned and fixed securely.
16) If the drill is used with a balancer or other suspension device ensure that it is fixed securely.

Accessories

Notes

Distributor